TIPA Korea Technology and Information Promotion Agency for SMEs

Technology Proposal for 2026 TIPA* International Joint R&D Program

(TIPA: Korea Technology and Information Promotion Agency for SMEs)

1. Technology Proposer Information

Proposer	Name	Qing Cao	Email	qingcao2@illinois.edu
Institution / Department	University of Illinois Urbana-Champaign, Department of Materials Science and Engineering			
Address	104 S. Goodwin Ave., Urbana, IL 61801, USA			

2. Technology Overview

Title of Proposed Technology	A technology enabling monolithic 3D integration of high-performance silicon transistors			
Korea's 12 National Strategic Technology Fields	Semiconductor/Display (√), Secondary Battery ( ), Advanced Mobility ( ), Next-gen Nuclear Power ( ), Advanced Bio ( ), Aerospace/Marine ( ), Hydrogen ( ), Cybersecurity ( ), AI ( ), Next-gen Communication ( ), Advanced Robotics & Manufacturing ( ), Quantum ( )			
Industrial Technology Classification [1)]	**Technology Field 1** (Large Category)		**Technology Field 2** (Large Category)	
	Electrical • Electronics			
	Medium Category	Small Category	Medium Category	Small Category
	Semiconductor Devices and Systems	Si Element/Semiconductor Materials		
Concept of Proposed Technology	Monolithic three-dimensional (3D) integrated circuits offer multiple advantages over conventional 2D architectures or 3D systems realized via wafer or chip stackings. However, their implementation faces the challenge of forming high-performance *n*- and *p*-channel transistors on top tiers under limited thermal budget to preserve the bottom-tier devices and interconnects from degradation. Low-temperature processed transistors built on laser-annealed polysilicon, metal oxides, and nanomaterials have been explored, but their performance is far inferior to transistors built on single-crystalline silicon. The purpose of this project is to fill this critical technology gap by developing a process to transfer-print single-crystalline silicon nanomembranes on wafer scale at low temperature (<200 °C) on top of silicon-CMOS wafers. The transferred Si membrane is then utilized to build high-performance transistors within a limited thermal budget (<400 °C). They will connect with the bottom-tier transistors through ultra-dense interlayer vias to form functional logic circuits with performance and chip-area footprint unattainable in 2D. This project solves the critical challenges in realizing high-performance 3D monolithic integration with			

	material, device, and process breakthroughs, providing integrated solutions to semiconductor foundries, e.g., Samsung Electronics, TSMC, Intel, etc., as target customers.
Rationale for Joint R&D Project	A joint R&D program between the university and a Korean SME deeply embedded in the semiconductor manufacturing supply chain and ecosystem will significantly accelerate technology development and commercialization. The collaboration combines the university's strengths in advanced materials research and novel process innovation with the SME partner's capabilities in tool design, rapid prototyping, manufacturability assessment, and production scaling toward 8-12 inch wafers. By integrating complementary expertise across the innovation pipeline, the partnership creates a direct pathway from fundamental discovery to practical, industry-ready solutions.
Keywords	1. Semiconductor 2. Microelectronics 3. 3D integration

3. Research and Development Objectives & Plan

Technology Readiness Level (TRL)[2]	**Start of the Project**	Level (2/3)	**End of the Project**	Level (5/6)
R&D Objectives	**Background:** The lateral shrinkage of silicon transistors has been the driving force for microelectronics for decades, but it has approached its physical limits. Stacking devices in the vertical direction becomes an attractive approach to achieve higher integration density and provides additional benefits in realizing more effective 3D vertical routing of interconnects to maximize data communication bandwidth between devices and circuit blocks. **Current landscape:** Today's approach for realizing 3D chips is mainly based on wafer or chip bonding with through silicon vias (TSVs). The large size of TSVs relative to that of transistors and the die-to-wafer or wafer-to-wafer misalignment limit the achievable inter-TSV pitch and thus the interlayer connectivity to a coarse grain above 1–10 μm. In contrary, monolithic 3D integration, where each layer of devices is fabricated directly over the bottom layer all over the same starting substrate, can enable inter-layer connection density at level commensurate with the lower-tier interconnects and via pitch, which can be down to 10–20 nm and thus allows 50–500 times denser connections than TSVs. **Challenges:** The implementation of monolithic 3D faces the challenge of forming high-performance top-layer semiconductors and transistors within a limited thermal budget < 400 °C. Thin-film transistors based on laser-annealed polysilicon, metal oxides, and nanomaterials have been explored as potential candidates, but their performance is far inferior to single-crystal Si MOSFETs, causing mismatch between bottom and top tires. **Our objectives and approach:** Here we seek to address these challenges by first developing a unique low-temperature roll-to-roll process to transfer-print thin silicon nanomembranes, derived from standard silicon wafers, as high-quality, single-crystalline semiconductors for wafer-scale 3D monolithic integration at low temperature. Single-crystalline silicon affords drastically improved electron-hole mobilities and uniformity			

	compared to polysilicon, metal oxides, nanotube networks, and 2D semiconductors. Compared to wafer bonding, the transfer-printing process has much relaxed requirements on the surface smoothness and cleanness of the interlayer dielectrics and does not cause wafer warpage, with a substantially lower capital and process costs. The transferred ultrathin silicon nanomembranes will then be utilized to fabricate high-performance transistors with a raised source-drain contact under a low thermal budget compatible with back-end-of-line (BEOL) integration, i.e., < 400 °C. The p-n junction here will be formed via atomic-layer etching at low temperature with their locations defined precisely by lithography to achieve precise, sub-10 nm, interlayer registration.
R&D Target Specifications	Technology milestones and associated timeline: • Demonstrate the preparation of single-crystalline silicon membranes from 4” wafers with thickness variation below 5 nm (10 months). • Demonstrate transferred Si membrane with strain distribution <0.05% and mobility σ <10% on wafer scale (6 months). • Demonstrate the stacking of ≥ 5 layers of silicon membranes on 4” wafer scale without detectable defects under both optical and infrared microscopes (9 months). • Demonstrate the stacking of silicon membranes on 8” wafer scale without detectable defects under both optical and infrared microscopes (15 months). • Demonstrate silicon MOSFETs built on transferred silicon membranes with yield greater than 95% and on-state current density I_{on}>600 μA/μm (18 months). • Demonstrate FinFETs made on transferred silicon membrane with I_{on} greater than 1 mA/μm (24 months). • Document the full set of data for device variability and reliability. The target is to limit I_{on} distribution for devices on the same tier < 20% and achieve tier-to-tier device variability < 20% (30 months). • Demonstrate cell libraries containing simple logic gates (33 months). • Demonstrate libraries containing cells specific to AI hardware (36 months).
R&D Plan	This project will have three specific aims, spanning from material preparation to device and 3D circuit demonstrations. **Aim 1: Preparation of freestanding silicon nanomembranes from bulk wafers and their wafer scale roll transfer to receiving substrates.** ***Objective:*** Develop a robust, scalable process to derive high-quality, wafer-scale single-crystalline silicon nanomembranes from bulk wafers and transfer them onto target wafer substrates under low thermal budget with high yield, low defectivity, and vertical scalability to multiple tiers. ***Approach:*** We will develop and optimize a process to derive single-crystalline silicon membranes directly from reusable bulk silicon wafers. As illustrated in **Fig. 1**, the process begins with a bulk (111) silicon wafer. Narrow and interlocked lines that are oriented perpendicular to the <$\bar{1}$10> direction are defined by lithography and RIE. The etch depth determines the eventual thickness of the released silicon membrane. The top surface and sidewalls are then protected with a bilayer hard mask consisting of thermal oxide and Si_3N_4 deposited by chemical vapor deposition. A second lithography and RIE step removes both the hard mask and the bulk silicon at the groove bottoms, producing micron-scale trenches that serve as release gaps with exposed silicon sidewalls. Subsequent anisotropic wet etching of silicon is performed using either KOH or more preferred the metal-ion-free tetramethylammonium hydroxide (TMAH). Because the etch rate is significantly faster along the (110) direction, undercutting occurs, yielding freestanding silicon membranes detached from the donor wafer substrate. Finally, the protective SiO_2/ Si_3N_4 layers are removed by wet etching in HF.

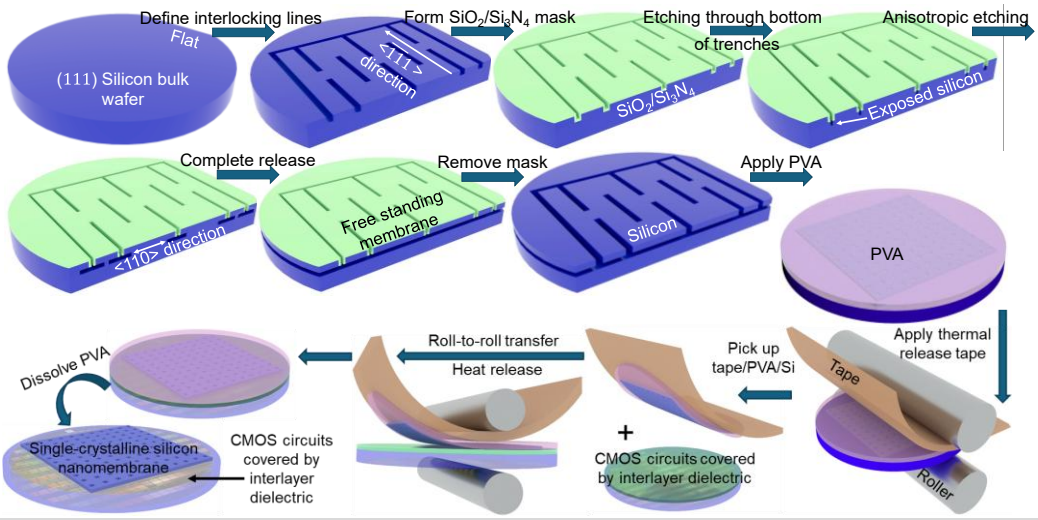

Fig. 1. Schematic of the preparation and transfer of Si membrane derived from bulk wafer.

The released ultrathin silicon nanomembranes will then be transferred onto the receiving substrates, e.g., completed silicon-CMOS wafers. In previous works, transfer printing of semiconductor membranes was typically performed using elastomeric stamps made of polydimethylsiloxane (PDMS), where the adhesion between the stamp and the transferred membrane can be dynamically modulated based on geometric and viscoelastic effects. However, this approach is not suitable for the transfer of defect-free silicon nanomembranes on wafer scale. **First**, it is difficult to control the adhesion switchability as modulated by the different retrieval and pick-up velocities over wafer-scale area. **Second**, the viscoelastic properties of the soft PDMS stamp may cause unintentional tilt and buckling defects of the membrane.

To overcome these limitations, in this project, we propose a scalable roll transfer process. After release, the silicon membrane is protected and mechanically supported by a spin-cast thin film of electronic-grade poly(vinyl alcohol) (PVA, low ionic impurity). A thermal-release tape is laminated onto the PVA/silicon stack under gentle roller pressure. Peeling the tape lifts the PVA-supported silicon membrane. The tape/Si/PVA stack is then aligned with the target wafer substrate and passed through a second roller pair under mild heating (~150 °C). This step transfers the PVA/silicon bilayer from the tape to the target substrate at a stable rate, minimizing tilt and buckling and achieving near-unity yield. Finally, dissolution of the PVA in hot water leaves a clean silicon membrane strongly bonded to the substrate.

Compared to conventional wafer bonding, which typically requires >400 °C processing, this method enables heterogeneous integration at temperatures below 150 °C, an essential advantage for monolithic 3D integration. Equally important, the process relaxes requirements on substrate smoothness. Owing to its conformal compliance, the thin silicon nanomembrane accommodates the surface topography of the receiving substrate, thereby suppressing interfacial void formation and ensuring robust, reliable adhesion. The equipment capital cost is also expected to be substantially lower than wafer bonders.

Preliminary results: **Fig. 2A** shows the release of silicon membrane from the (111) bulk wafers based on the anisotropic etching. **Fig. 2B** illustrates single-crystalline silicon nanomembranes transferred to cover an 8” wafer, without interfacial defects as evident from the infrared image, due to the mechanical compliance of the Si membrane (**Fig. 2C**). The process can be repeated to form a monolithic multi-tier stack, where layers of single-crystalline silicon are separated with each other by thin (50–100 nm thick) amorphous interlayer dielectrics on the same substrate (**Fig. 2D**). These results validate feasibility and provide a strong foundation for process improvement and scaling.

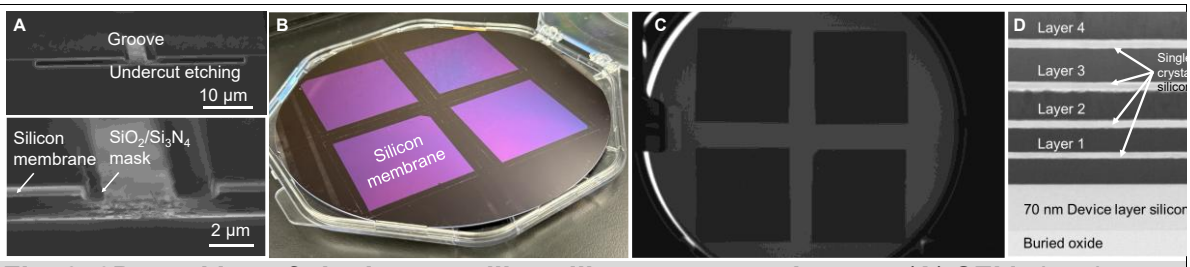

Fig. 2. 3D stacking of single-crystalline silicon nanomembranes. (**A**) SEM showing anisotropic etching to produce silicon membrane from a bulk (111) wafer. (**B**) Stitching of 4 transferred films on a 200 mm wafer and (**C**) its IR image showing no interfacial void. (**D**) Cross-sectional STEM of 5 stacked layers for monolithic 3D integration scalable to multiple vertical tiers.

Next step: Based on our preliminary data, as the next step to be pursued in this project, we will **(1)** fully characterize the properties (strain, mobility, etc.) and map the uniformity of stacked single-crystalline silicon membranes, and **(2)** develop the transfer printing equipment and process with our SME partners for scaling toward 8" and 12" wafers. We note here that the process developed can also be used as an alternative process to prepare silicon-on-insulator wafers with potentially lower cost than the current SmartCut and SIMOX (Separation by Implantation of Oxygen) processes.

Aim 2: High-performance MOSFETs fabricated on transferred silicon nanomembranes under a low thermal budget.

Objective: Demonstrate high-performance and scaled *p*- and *n*-channel MOSFETs fabricated on transferred silicon nanomembranes under a BEOL-compatible thermal budget (≤ 400 °C). The high device performance validates the quality of transferred single-crystalline silicon membrane. This Aim also build the connection from materials to device applications.

Approach: We will then demonstrate high-performance *p*- and *n*-channel transistors built on the transfer-printed single-crystalline silicon nanomembranes under a restricted thermal budget compatible with BEOL integration. Compared to the conventional flow to fabricate front-end-of-line (FEOL) transistors, our novel design avoids the high-temperature doping/dopant activation steps after transfer. The process is schematically illustrated in **Fig. 3**. Prior to transfer, the top surface of the silicon doner wafer is doped by diffusion to create a heavily doped surface layer with a shallow junction depth. After layer transfer, we will pattern the source-drain electrodes, which are further utilized as the mask for atomic-layer etching of silicon in exposed areas beyond the junction depth. It therefore forms a lightly doped recessed channel self-aligned to the raised, heavily doped source-drain and metal contacts. Device isolation down to the interlayer dielectrics and the formation of high-k/metal gate stack complete the device, all within a thermal budget ≤400 °C.

In the proposed project, through collaboration with our SME partners, we will optimize the device structure/geometry designs as guided by TCAD models. To achieve higher TRL, the device gate length and contacted gate pitch will be scaled down to ~30–45 nm and 90–140 nm, respectively, which are commensurate with the footprint of 22–45 nm node FEOL transistors. We will also adopt 3D fin structures with fin-width down to 15–20 nm to boost performance. These device structures will be defined using an Elionix 150 keV E-Beam Lithography (EBL) System, which is the highest energy EBL tool in North America, housed in the Holonyak Micro & Nanotechnology Lab at the University of Illinois. Our target is achieving device performance, in terms of on-state current density and transconductance, >10x better than state-of-the-art BEOL transistors built on polysilicon, metal-oxide semiconductors, or nanomaterials, and approaching performance of FEOL MOSFETs, which justifies the value of our monolithic 3D integration approach. In addition to performance metrics, we will also extract variabilities from transistors arrays and systematically measure device reliability in terms of V_T shifts under temperature and bias

stresses. These results will be utilized to generate statistical and reliability models for monolithic 3D silicon transistors.

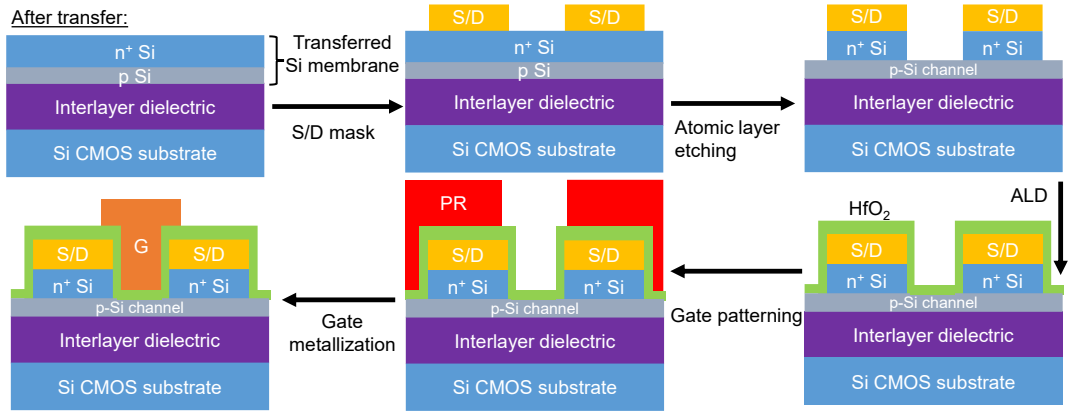

Fig. 3. Low-temperature process to build MOSFETs on transferred silicon membranes.

Preliminary results: **Fig. 4A** shows a fabricated raised source-drain structure. The MOSFET operates well as evident from its transfer (**Fig. 4B**) and output characteristics (**Fig. 4C**). The extracted effective mobility is about 90 cm^2/Vs, comparable to that of FEOL MOSFETs with high-k/metal gate. These results validate feasibility and provide a strong foundation for further device scaling, optimization, and systematic studies on variability and reliability.

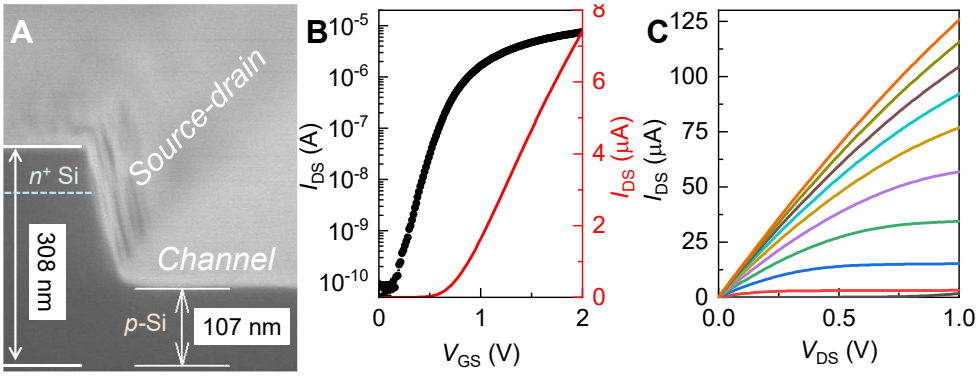

Fig. 4. Low-temperature fabricated MOSFETs on Si membrane. (**A**) Cross-section SEM micrograph showing raised source-drain and light doped recessed channel defined by etching. Transfer (**B**) and output (**C**) characteristics of a completed transistor.

Aim 3: 3D Circuit blocks as library cells.

Objective: Realize functional 3D integrated circuits using vertically stacked silicon transistors with partition at transistor-level inter-tier granularity and establish an experimentally validated 3D cell library. This Aim will substantially elevate the TRL of the project. Together with SME partners, we expect to engage foundry customers to prepare the full process-design kits at this stage.

Approach: Moving toward higher TRL, we will then target at demonstrating complementary 3D integrated circuits based on vertically stacked layers of silicon transistors in experiments, starting from CMOS inverters. We will fabricate inverter arrays, together with NAND and NOR gates, and systematically characterize their yield, gain, and noise margins to experimentally validate the 3D cell library.

Our process gives us the capability of scaling toward multiple vertically stacked layers, which are especially attractive to build essential circuits for AI hardware architectures. For example, there have been extensive works on building in-memory-computing accelerators for data-intensive computations, where the SRAM arrays are integrated with logic circuits. Conventional SRAM-based memory systems offer preferential access to data that are

stored contiguously along a single dimension, i.e., row-wise storage in a matrix. However, for processing-in-memory applications, we need to retrieve both row and column data with complicated access patterns, causing significant penalty in latency and energy consumption since the column data can only be retrieved via sequentially accessing multiple rows. The monolithic 3D integration allows us to fabricate **(1)** 8T 3D SRAM arrays incorporating additional transistors for column-read operations and **(2)** 10T 3D SRAM arrays capable of performing high-order data processing such as vector-matrix-vector multiplications to accelerate Transformer-based foundation models and large language models, without increasing the overall chip area.

We will also explore the fabrication and performance benchmarks of other 3D circuit blocks deemed critical by our SME partners and final target customers, either design houses or semiconductor foundry.

Preliminary results: As a preliminary result, we have already fabricated 6T SRAM cells by stacking high-performance silicon transistors in three layers (**Fig. 5AB**). The false-coloured SEM micrograph shows vertical overlapping of micron-scale transistors and interconnects for density scaling with reduced routing congestion (**Fig. 5C**). The completed circuit demonstrates full SRAM cell operations in hold (**Fig. 5D**), read (**Fig. 5E**), and write (**Fig. 5F**) with applied drive voltage V_{DD} down to 0.7 V. These results validate feasibility and provide a strong foundation for proposed systematic studies of a full collection of circuit blocks built on scaled monolithic 3D silicon transistors, with a focus on AI hardware.

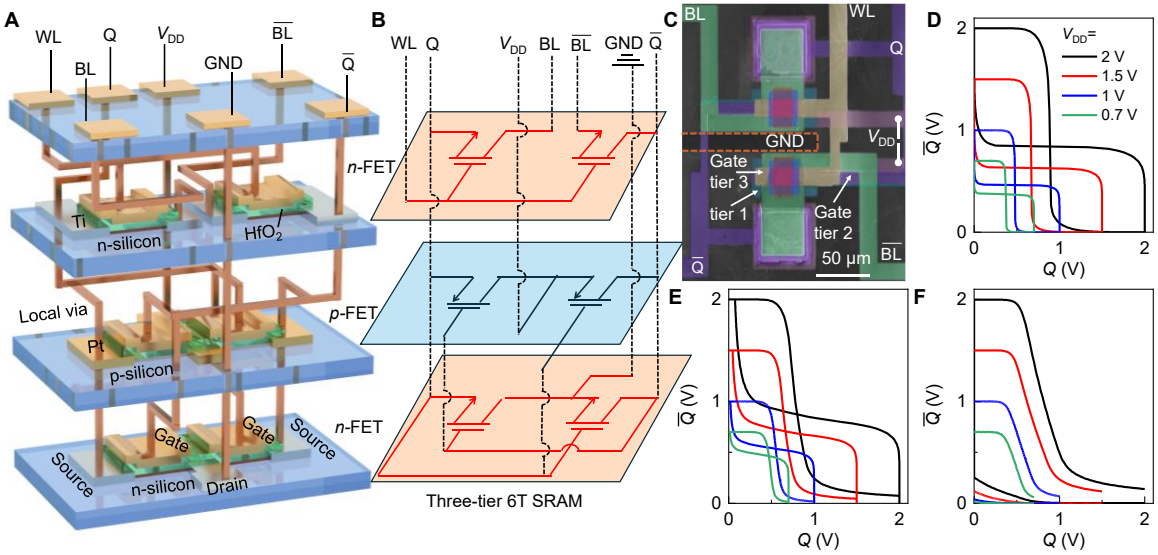

Fig. 5. Monolithic 3D cell. (**A**) Layout schematic, (**B**) circuit diagram, and (**C**) false-coloured SEM micrograph of a monolithic 3D 6T SRAM cell. (**D**) Hold, (**E**) read, and (**F**) write margin measurements with V_{DD} of 2 V (black) to 1.5 V (red), 1.0 V (blue), and 0.7 V (green), respectively.

4. R&R (Roles and Responsibilities)

Expected R&R of Research Institute	The university will serve as the primary technical lead for research, process innovation, and device/circuit-level demonstrations. Its responsibilities include developing the chemistry and mechanics foundations of the project, advancing the materials and device technologies, and providing access to state-of-the-art research infrastructure. Specifically, the university team will design and optimize the processes for fabricating single-crystalline silicon membranes, including anisotropic etching, membrane release, and low-temperature roll-transfer techniques. The university will also lead the development of high-performance MOSFETs and FinFETs built on transferred membranes, including pre-doping strategies, atomic-layer etching, device isolation, and high-k/metal-gate integration under BEOL-compatible thermal budgets. In addition, the university will conduct detailed characterization of material quality (strain, mobility, etc.), device variability, and reliability. This includes the use of advanced tools such as the 150 keV Elionix E-Beam Lithography System, high-resolution aberration-corrected SEM/STEM, IR imaging, and electrical characterization platforms. Beyond device-level work, the university will design and experimentally validate 3D circuit blocks, including inverters, NAND/NOR gates, and 6T/8T/10T SRAM cells, and generate the corresponding statistical and reliability models needed for library development and technology demonstrations to customers. Collectively, these contributions establish the scientific and technological foundation required for building the platform for monolithic 3D silicon integration.
Expected R&R of Korean SME Partner	The Korean SME partners will play a critical role in translating the university's research breakthroughs into scalable, manufacturable technologies suitable for industrial adoption. Their contributions will focus on engineering development, equipment design, process scaling, and manufacturability validation. In particular, SME partners will co-develop the roll-transfer equipment and associated tooling required for high-yield membrane transfer on 8-inch and 12-inch wafers. This includes mechanical design of roller systems, thermal-release tape handling modules, alignment mechanisms, and process control strategies to ensure uniformity, throughput, and defect suppression at production-relevant scales. SME partners will also lead efforts in process integration and reliability testing to ensure that the developed technologies meet industrial standards. They will evaluate, improve, and validate the compatibility of the transfer-printed silicon membranes and low-temperature device processes with existing semiconductor manufacturing lines. In collaboration with the university, SME partners will identify key circuit blocks and performance metrics required by downstream domestic and global customers, such as AI companies, design houses, and foundries, and help define specifications for 3D logic and memory libraries. Their resource commitments may include engineering personnel, prototype equipment, cleanroom access, and support for pilot-scale testing. Through continuous feedback loops, SME partners will ensure that the developed technologies are aligned with market needs, manufacturable at scale, and positioned for successful commercialization.

5. Expected Outcomes/Impact

Expected Outcomes and Impact	The successful completion of this joint R&D project is expected to establish a transformative monolithic 3D integration platform that combines the performance of single-crystalline silicon with the manufacturability and thermal constraints of BEOL processing. The project will deliver a validated, wafer-scale process for producing and transferring single-crystalline silicon nanomembranes, and fabricating high-performance MOSFETs and FinFETs under BEOL-compatible thermal budget ≤400 °C, and functional 3D circuit blocks, including logic gates and SRAM cells, demonstrated across multiple vertically stacked tiers. These outcomes will provide the scientific foundation, process technology demonstration, and early-stage design libraries needed to enable next-generation 3D ICs for AI, high-performance computing, and memory-centric architectures. For Korean SME partners, the project will accelerate the development of proprietary roll-transfer equipment, strengthen their competitiveness in advanced semiconductor tooling, and open new opportunities in the global market for heterogeneous integration technologies and advanced packaging. More broadly, the collaboration will catalyze a scalable pathway from academic innovation to industrial deployment, positioning both partners at the forefront of monolithic 3D integration and enabling long-term commercial and technological leadership.